M04 Camshaft **4 H 50 TICD.10**

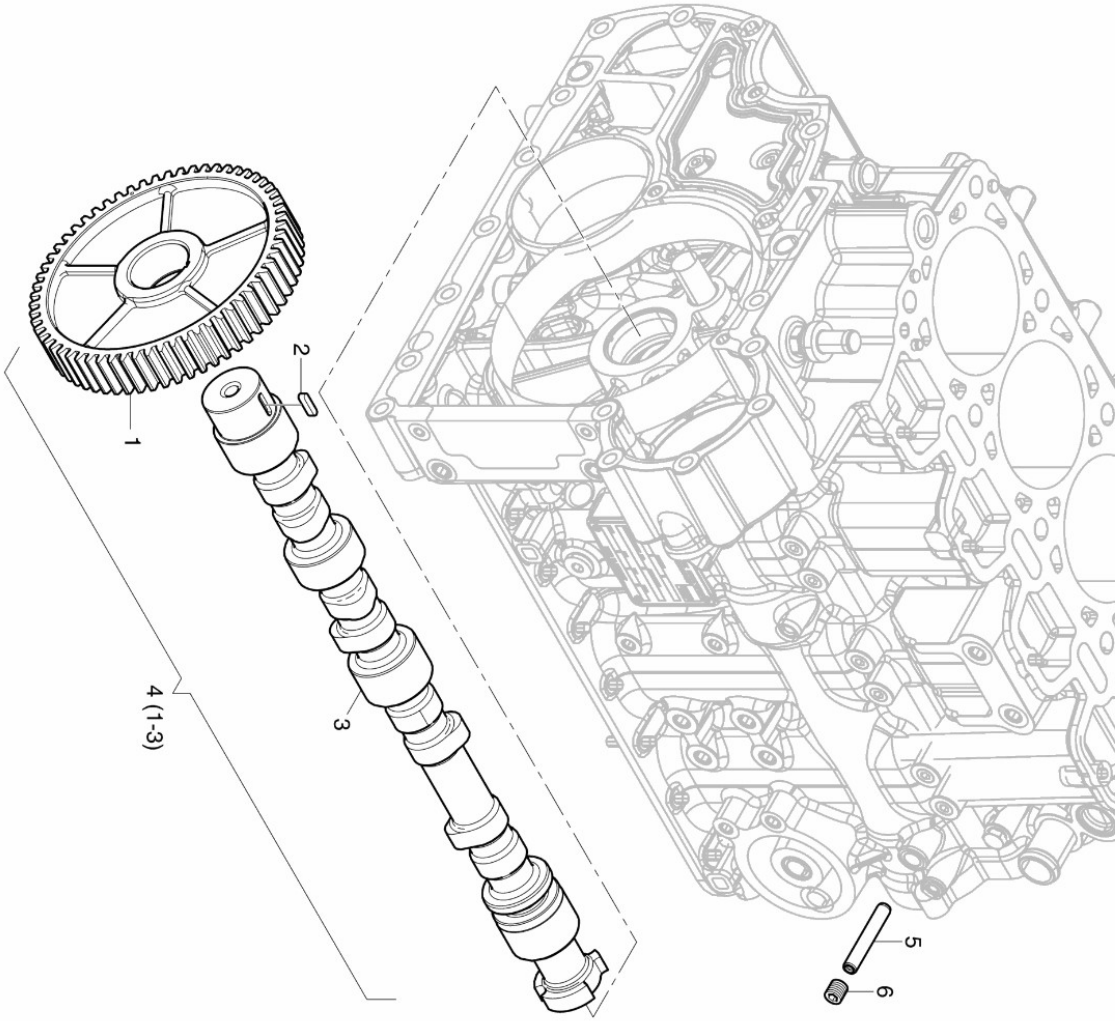

Page 1 from 2

M04 Camshaft 4 H 50 TICD.10

Pos.	Part no.	Description	Qty.	Notice	Add. notice
1	000004298600	GEARWHEEL CAMSHAFT	1		
2	000050636600	FITTINGKEY A 4 X 4 X 16	1	4 X 4 X 16 part was replaced by FITTINGKEY A 4 X 4 X 16 000050938900	
3	_noorder	No single order	-		
4	000002033402	CAMSHAFT+GEARWHEEL 4H50	1		
5	000050629700	CYL. PIN 8X50	1	8 x 50	
6	000050627401	GRUB SCREW M10X10 PRECOTE 30-3	1	M 10 x 10 DIN 913 45H-VZ DIN 913-45H-VZ	